Should I Tell Chantal?

Part I

You're with a group of friends, and some are playing computer games while others are about to watch a movie in the next room. One of your friends, Chantal, likes the games but decides to watch the movie instead. Five of you, including Chantal, decide to watch the movie.

Once the movie starts, you realize that you have already seen the movie and that the ending is very scary. Although your other three friends love the suspense of scary movies, Chantal has been traumatized by scary movies in the past. You're now faced with this question: Should you tell Chantal the scary ending?

Part II

Before answering the question, you need to have all the information. You have some relevant facts already. What else do you need to know to make a decision? What questions do you have?

Part III

Questions: Should you tell Chantal anything about the ending? Why or why not?

Copyright © 2009 Education Development Center, Inc. *Exploring Bioethics*.
Permission granted for classroom use.

Alzheimer's Disease and Genetic Testing: Relevant Facts

Part I: APOE in the Human Population

The gene for apolipoprotein E (APOE) comes in three varieties (alleles): *E2*, *E3*, and *E4*. While *E2* protects a person from developing Alzheimer's disease, *E4* increases the chance of developing it. Humans inherit one copy of the APOE gene from each of their biological parents. The APOE genotype alone does not determine whether a person will develop Alzheimer's disease, though. About 30 percent of Alzheimer's disease patients have at least one copy of *E4*, but about 30 percent of people with the disease do not have a copy of *E4*. So, people without *E4* may still get Alzheimer's disease, and people with *E4* may never get it.

Approximate Distribution of *E2*, *E3*, and *E4* in the Human Population

Percent of Human Population	Inheritance	Effect on Person
1–2%	2 copies of *E2* (*E2/E2*)	Decreased chance of developing Alzheimer's disease
15%	1 copy of *E2*, 1 copy of *E3* (*E2/E3*)	Decreased chance of developing Alzheimer's disease
55%	2 copies of *E3* (*E3/E3*)	Normal (baseline) chance of developing Alzheimer's disease
1–2%	1 copy of *E2*, 1 copy of *E4* (*E2/E4*)	Normal (baseline) chance of developing Alzheimer's disease
25%	1 copy of *E3*, 1 copy of *E4* (*E3/E4*)	3 to 5 times greater chance of developing Alzheimer's disease
1–2%	2 copies of *E4* (*E4/E4*)	15 times greater chance of developing Alzheimer's disease

Copyright © 2009 Education Development Center, Inc. *Exploring Bioethics*.
Permission granted for classroom use.

Part II: Instructions

1. With a partner, read the information below. One person should read the question aloud, and the other should read the answer aloud.
2. Underline the facts that might influence your decision of whether or not to open your envelope.

Scientific Question	Answer
What is Alzheimer's disease?	Alzheimer's disease kills brain cells and causes problems with memory, thought processes, and behavior. Eventually, the disease is fatal. People usually have Alzheimer's disease for 5 to 20 years before dying of it.
What different kinds of Alzheimer's exist?	Different types of Alzheimer's disease arise at different times in a person's life. This genetic test gives information regarding the most common type of Alzheimer's (generally referred to simply as Alzheimer's disease), which arises after age 65. However, there is also early-onset Alzheimer's disease, which arises in a person's 30s, 40s, or 50s. Early-onset Alzheimer's disease is quite rare.
What causes Alzheimer's?	For any one person, Alzheimer's disease does not have a single cause. Instead, there are many risk factors; some of these may be inherited, while others may be environmentally influenced. Some studies, for example, show that type 2 diabetes, unhealthy arteries, and severe head injuries could contribute to overall lifetime risk of Alzheimer's disease.
What gene is tested?	The gene is for a protein called apolipoprotein E, or APOE (pronounced ap-oh-ee). You inherit one copy of the gene from each biological parent. The APOE gene comes in three varieties (alleles): *E2*, *E3*, and *E4*. Recent research shows that the *E4* version contributes most to Alzheimer's risk.
If you have *E4*, how likely are you to get Alzheimer's?	Your chance of getting Alzheimer's if you have one *E4* allele depends on what your other allele is. If you have two *E4* alleles, your chance is 15 times greater than someone who inherited *E3* from both parents (baseline). If your other allele is *E3*, your chance is 3 to 5 times greater, and if your other allele is *E2*, your chance is the same as a person with two *E3* alleles (baseline).
Is it possible to have *E4* but never get Alzheimer's?	Yes. People who have *E4* generally have a 13–57% lifetime chance of developing Alzheimer's. Clearly, this risk is nowhere close to 100%.
Is it possible to not have *E4* but still get Alzheimer's?	Yes. There are many other risk factors that influence a person's lifetime chance of getting Alzheimer's disease. More than 30% of people with Alzheimer's disease do *not* have *E4*.
Can you have surgery or take any medication to prevent yourself from getting Alzheimer's?	No. You currently cannot prevent Alzheimer's disease.

Copyright © 2009 Education Development Center, Inc. *Exploring Bioethics*.
Permission granted for classroom use.

Now, *on your own*, answer the following questions:

3. Using the information you have learned, do you want to open your envelope?

   Yes _____ No _____

4. Referencing facts on page 2 of Master 4.2, provide reasons to support your answer:

Copyright © 2009 Education Development Center, Inc. *Exploring Bioethics*.
Permission granted for classroom use.

Max's Case—Thyroid Cancer, MEN II,* and Genetic Testing

Part I

Max is 15 years old. Many of Max's relatives on his mother's side died quite young (20s, 30s, and 40s) from thyroid cancer. Max's mom died several years ago, but not from thyroid cancer. There are many genetic reasons for thyroid cancer, including an inherited mutation that leads to a rare disorder called MEN II (multiple endocrine neoplasia II). The MEN II–causing mutation leads to a 100-percent chance of a kind of thyroid cancer that will be fatal if left untreated. The thyroid cancer arises early in life, sometimes even during adolescence.

Max's doctor informs Max and his father that there is a genetic test for this inherited mutation. (None of Max's other relatives have ever been tested.) If Max tested positive, he could soon have surgery to remove his thyroid gland so that he would never develop thyroid cancer. Without his thyroid, Max would have to take a daily pill containing a hormone called thyroxine, an important chemical produced by the thyroid gland, for the rest of his life. The doctors would determine the appropriate dosage for Max. If the dosage isn't quite right, Max could temporarily experience side effects such as sweating, muscle cramps, and headaches. However, if he experienced these symptoms, the doctors would adjust the dosage, and the side effects normally disappear. If people without thyroids fail to take their medication for long periods of time, their metabolism is dangerously affected; eventually, failure to take the medication can be fatal.

Max refuses to have the genetic test, insisting it is *his* life. He doesn't want this information, says he wouldn't want preventive surgery, and doesn't like the idea of daily medication after the surgery. Max's father and doctor still insist that he should have the genetic test.

Part II

Ethical Question: Who should decide whether Max will have this genetic test? Should Max decide? Should his father decide? Should his doctor decide? Why?

Part III

As you can see from the pedigree that follows, Max has multiple relatives who have died of thyroid cancer, including his grandfather Nick. However, remember that there are many different types of thyroid cancer; only a small percentage of thyroid cancers are MEN II. Therefore, the fact that Max has relatives who have had thyroid cancer does not necessarily mean that MEN II runs in his family. His relatives could have gotten thyroid cancer for reasons only partly (or not at all) related to inheritance. Diane has been cancer-free, though she has high levels of thyroxine, which could be a warning sign of thyroid cancer in the future. There is no history of thyroid cancer on Pierre's side of the family.

*Multiple endocrine neoplasia type 2.

Copyright © 2009 Education Development Center, Inc. *Exploring Bioethics*.
Permission granted for classroom use.

Name(s) _____

Max's Family Tree on His Mother's (Susie's) Side

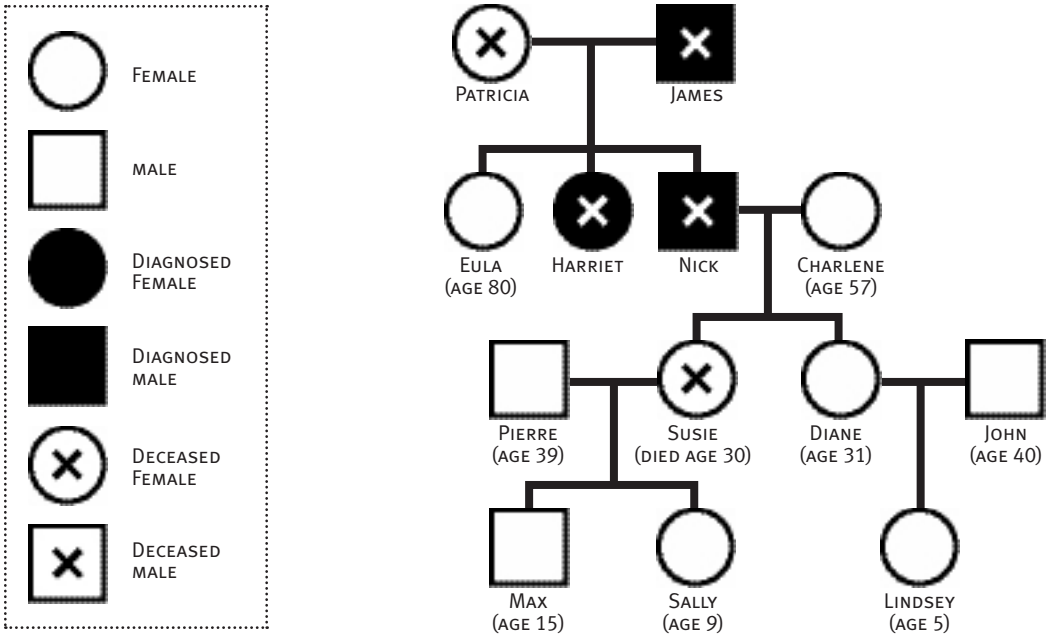

NOTE: Shaded individuals had thyroid cancer. Harriet, James, and Nick were each diagnosed with it in their teens, 20s, or 30s, and all died of it. Susie died, but not of thyroid cancer. No individual is yet known to have MEN II; only a small percentage of thyroid cancers are due to the MEN II mutation. On Pierre's side of the family, there is no history of thyroid cancer.

Question	Answer
1. Who had thyroid cancer, and when were they diagnosed with it?	
2. Who died of thyroid cancer?	
3. Of those who had thyroid cancer, who is known to have had MEN II?	
4. Who died of reasons not related to thyroid cancer?	
5. Who has elevated levels of thyroxine, which could be a warning sign of future thyroid cancer?	
6. If someone had MEN II, what would his or her genotype be?	*The MEN II gene is dominant. The genotype could be homozygous dominant (TT) or heterozygous (Tt). Since the dominant allele is rare, assume that a person with MEN II is heterozygous.*
7. If someone did *not* have MEN II (even if they did have thyroid cancer), what would his or her genotype be?	

Copyright © 2009 Education Development Center, Inc. *Exploring Bioethics*.
Permission granted for classroom use.

Thyroid Cancer, MEN II,* and Genetic Testing—Relevant Facts

Name(s) _____

Scientific Question	Answer
What is your thyroid?	Your thyroid is a gland near your voice box. This gland produces a hormone called thyroxine, which controls your metabolism.
What is thyroid cancer?	Cancer means that you have an overproduction of a certain type of cell. Thyroid cancer means that the patient has a tumor in his or her thyroid gland. This tumor is capable of spreading to other parts of the body. If left untreated, thyroid cancer is fatal. However, if caught early and surgically removed, it has a 95% cure rate.
What causes thyroid cancer?	There are many types of thyroid cancer, and people develop thyroid cancer for different reasons. It can be caused by inherited mutations, environmentally caused mutations, or a combination of both.
Which of Max's genes would be tested?	Max would be tested for a mutation in a gene called *RET*. This mutation causes multiple endocrine neoplasia type 2 (MEN II), which leads to one specific type of thyroid cancer. It is very unusual for cancer to be caused by a single mutation. Usually, cancer is the result of the accumulation of many different mutations, some inherited and others environmental. The inherited mutation here is an autosomal dominant mutation.
If Max has the mutation, how likely is he to get thyroid cancer?	Max would have a nearly 100% chance of getting thyroid cancer in his teens, 20s, or 30s.
Is it possible to *not* have this mutation but still get thyroid cancer?	Yes. There are many other genes that affect one's lifetime chance of getting thyroid cancer.
Can you have surgery or take any medication to prevent yourself from getting thyroid cancer?	Yes. Max's thyroid could be surgically removed now. If this were to occur, Max would have a 0% lifetime chance of thyroid cancer. Because he would no longer have his thyroid gland, Max would need to regulate his metabolism by taking a thyroid pill each day.

Your Own Relevant Question	Answer

*Multiple endocrine neoplasia type 2.

Copyright © 2009 Education Development Center, Inc. *Exploring Bioethics*.
Permission granted for classroom use.

Genetic Testing—Key Concepts

- Some genetic tests are completely predictive—a positive result means you have or will definitely get the medical condition.
- Other genetic tests—such as the APOE test for Alzheimer's disease—can only tell you if you are at a greater-than-average risk for developing a condition; the tests can't predict with certainty that you will get it.
- Sometimes the disease develops at a very young age, other times it occurs in midlife, and yet other times it occurs late in life.
- Sometimes responses such as surgeries or medications exist to prevent the condition. In such cases, knowing about the condition (or the risk factor) can help you reduce the bad consequences of the condition or can reduce or completely eliminate the risk. Other times, there is no response that will definitely lower your risk of the condition.
- Often, test results have implications not only for the person being tested, but also for genetically related family members such as siblings. This possibility raises many questions about what information the person being tested should share with family members.
- Many people have expressed concern about how best to ensure that results of a genetic test remain confidential and how to avoid discrimination based on genetic information. For example, some people are concerned that insurers and employers could find ways to use this information to deny health coverage or work opportunities to people with certain genetic predispositions.

Copyright © 2009 Education Development Center, Inc. *Exploring Bioethics*.
Permission granted for classroom use.

Thyroid Cancer, MEN II,* and Genetic Testing—Checking for Understanding

Name(s) _____

1. What is MEN II? Although many kinds of cancer are linked with MEN II, nearly 100 percent of people with the gene for MEN II will get cancer of what organ?

2. The Alzheimer's disease genetic test doesn't predict Alzheimer's disease with certainty; a person who tests positive for *E4* has only a 13-to-57-percent lifetime risk of Alzheimer's disease. If a person tests positive for the mutation that causes MEN II, what is the chance that the person will get thyroid cancer?

3. There is no followup medical procedure that will prevent onset of Alzheimer's disease. What followup medical options are there for a person who has tested positive for the mutation that causes MEN II?

4. As noted, this type of thyroid cancer is caused by an *autosomal dominant* mutation. What does this mean? (What does *autosomal* mean? What does *dominant* mean?)

5. Other than the predictive value of the test and the options for followup medical care, what is another difference between Alzheimer's disease and the type of thyroid cancer associated with MEN II?

6. If Max were to test positive for the mutation, would he know anything more about anyone else in his family? Explain, and be as specific as possible.

Copyright © 2009 Education Development Center, Inc. *Exploring Bioethics*.
Permission granted for classroom use.

What Impact Would Max's Newly Discovered Mutation Have on Him and Others?

Name(s) _____

Name	Age	1. If Max had the mutation, what is the chance that the person listed below also inherited the mutation? 2. What is the chance that the person would develop thyroid cancer?
Max		1. 100% 2. 100%
Pierre		1. 2.
Sally		1. 2.
Diane		1. 2.
Lindsey		1. 2.
Eula		1. 2.

Copyright © 2009 Education Development Center, Inc. *Exploring Bioethics*.
Permission granted for classroom use.

Thyroid Cancer and Genetic Testing: Harms and Benefits

Name(s) _____

Complete the chart below by listing relevant scientific facts about genetic testing and followup medical care for this type of thyroid cancer.

Type of Harm or Benefit	Harms	Benefits
Physical		
Psychological (Emotional)		
Social		
Economic		

Copyright © 2009 Education Development Center, Inc. *Exploring Bioethics*.
Permission granted for classroom use.

Your Tentative Thoughts

Name(s) _____

1. Do you think that the benefits of the MEN II genetic test outweigh the harms? Explain why or why not, being sure to reference harms and benefits from today's classwork.

2. Even if *you* think it's best for Max to get the test, *who* should decide whether Max will have the test is still an open question.

Who should decide whether Max will have the MEN II genetic test?

Option A: Max's choice, but highly encouraged to take test
Option B: Max's choice, but highly encouraged *not* to take the test
Option C: Max's choice, without influence from anyone else
Option D: Doctor's choice
Option E: Father's choice

   a. Which of the above options has the best reasons supporting it? Or, describe your own option if none of the five listed above reflects it.

   b. Using scientific knowledge and ethical considerations (respect for persons; minimizing harms and maximizing benefits; and fairness), come up with two reasons in support of the option you chose.

Copyright © 2009 Education Development Center, Inc. *Exploring Bioethics*.
Permission granted for classroom use.

Camilla's Case: Colon Cancer and Genetic Testing

Camilla has an aunt, Felicia, who was recently diagnosed with colon cancer. On the basis of Felicia's age and molecular markers within her tumor cells, her doctors strongly suspect that Felicia has a certain inherited form of colon cancer called hereditary nonpolyposis colorectal cancer (HNPCC). Even though Felicia could get a genetic test to confirm this, she decides that she is not emotionally ready for the genetic test. However, she shares the doctor's concern with the rest of her family, in case others want to get the test. Felicia's only request is that they do not share the results of any genetic tests with her.

Camilla's mom wants her to get the genetic test; she'd like to know whether her eldest daughter is at risk for HNPCC. The mutation is a risk factor for cancer but does not alone cause cancer. Camilla doesn't want to have the genetic test now, despite pressure from her mother.

Camilla's Family Tree

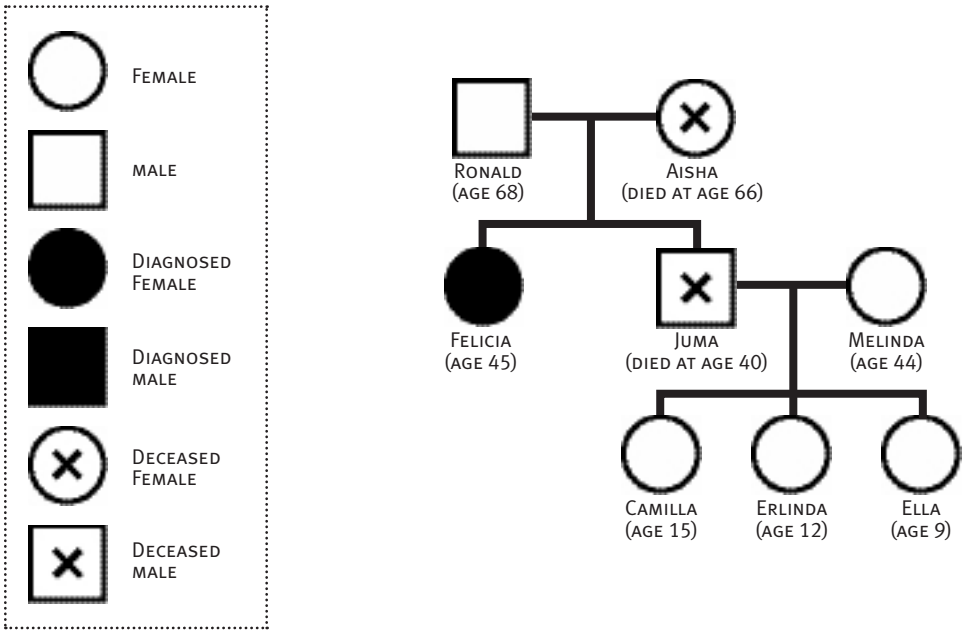

NOTE: Shading means the person was diagnosed with colon cancer; however, a diagnosis does not necessarily mean that the person had HNPCC. Aisha and Juma have died, but not of cancer.

Copyright © 2009 Education Development Center, Inc. *Exploring Bioethics*.
Permission granted for classroom use.

Ethical Questions

- Who should decide whether Camilla will have this genetic test?
- If Camilla were to have the genetic test, who else (if anyone) should learn the results?

Scientific Question	Answer
How is this mutation inherited?	It is autosomal and dominant.
If someone tests positive for the HPNCC genotype, what is that person's lifetime chance of developing colon cancer?	The person has an 80% chance of developing colon cancer by age 75.
How old, on average, is a person when he or she gets this type of colon cancer?	The average age of onset is 44.
Are there any followup, preventive-care options for people who test positive for this mutation?	Yes, Camilla could get colonoscopies regularly so that her colon and large intestine are thoroughly examined often. Regular colonoscopies and early detection of colon cancer is critical; when colon cancer is caught early, more than 90% of patients will live for at least five years after their diagnosis. Also, dietary changes and/or medications might delay the onset of the colon cancer.
Would a positive genetic test result indicate a higher chance of other types of cancer?	Yes, including stomach, uterine, and ovarian cancers.

Instructions

Using the relevant facts above *and* ethical considerations (respect for persons; minimizing harms and maximizing benefits), write a letter addressed to Camilla, her mother, or her doctor. In this letter, you must address the following:

PART I: Who should decide whether Camilla will have this genetic test? You must provide three reasons in support of your answer that reveal your understanding of both the relevant facts *and* ethical considerations.

PART II: If Camilla were to have the genetic test, who else (if anyone) should learn the results? Assume that Camilla does have the test and that Camilla, her mother, and her doctor learn the results. Camilla has voiced a strong preference that no one else in the family learns about her personal results. How should Camilla's mother handle this? Should she tell anyone else in the family about the test? Explain what Camilla's mother should do, giving **two** reasons to support your answer. Again, these reasons must reveal your understanding of both the relevant scientific facts *and* the ethical considerations.

Copyright © 2009 Education Development Center, Inc. *Exploring Bioethics*.
Permission granted for classroom use.

You can use the following checklist to help you complete your letter.

✓	Requirement
	Part I
	Did I answer the question, Who should decide?
	Did I provide at least three reasons? Do my reasons show that I understand the ethical considerations *and* the relevant scientific facts?
	Part II
	Did I answer the question, Who else, if anyone, should learn the results?
	Did I provide at least two reasons? Do my reasons show that I understand the ethical considerations *and* the relevant scientific facts?
	Overall
	Did I organize my work into paragraphs, proofread, and elaborate (provide depth to my answers)?

Copyright © 2009 Education Development Center, Inc. *Exploring Bioethics*.
Permission granted for classroom use.

Extension (Optional)

About Retinitis Pigmentosa

Scenario

An airline company is about to offer pilot-in-training positions to several young adults. These training sessions will last several weeks and are quite a large investment for the airline company. Therefore, before a formal job offer and the intensive training, the company wants to test each prospective pilot for some of the most common mutations that cause retinitis pigmentosa. If the genetic test yields a positive result, the company plans to not hire or train that person. The symptoms of retinitis pigmentosa develop quite gradually—over many years. In other words, at the point of genetic testing, the pilot would likely not be experiencing any symptoms, so passenger safety is not an issue. Once symptoms developed, the pilot would be removed from his or her post to ensure passenger safety. By not hiring prospective pilots who test positive for this vision disorder, the company will not be investing training money in pilots whose careers could be cut short by retinitis pigmentosa.

Facts about Retinitis Pigmentosa

Normal vision.

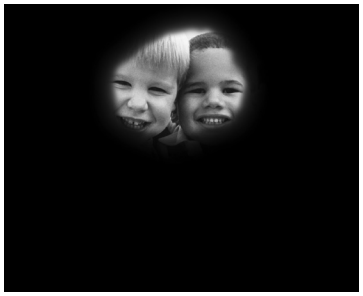

Photo: Courtesy National Eye Institute, National Institutes of Health

Vision with retinitis pigmentosa.

Scientific Question	Answer
What is retinitis pigmentosa (RP)?	RP is a gradual loss of vision caused by the death of photoreceptor cells in the eye.
What causes RP?	RP in an inherited disease. Mutations may be autosomal dominant, autosomal recessive, or X-linked recessive.
What are the symptoms?	One of the first symptoms is often a loss of night vision. Other early symptoms may include an inability to identify colors. Eventually, peripheral vision is almost entirely lost (see picture above). It is rare for a person with RP to become completely unable to see.
How old are people when they get RP?	Symptoms of RP often develop in adolescence or early adulthood, though people with RP are not usually legally blind until their 40s.
How common is RP?	RP is quite rare and only affects about 1 in every 4,000 people in the United States.
What can be done to help people with RP?	Vitamin A supplements and sunglasses may help delay the progression of RP. However, there is no cure.

Sources: Foundation Fighting Blindness. 2008. What is retinitis pigmentosa? Retrieved online March 29, 2008, at *http://www.blindness.org/content.asp?id=45*. Griggs, P. 2006. Retinitis pigmentosa. Retrieved March 29, 2008, from *http://www.nlm.nih.gov/medlineplus/ency/article/001029.htm*.

Copyright © 2009 Education Development Center, Inc. *Exploring Bioethics*.
Permission granted for classroom use.